eBOX639-822-FL

Fanless Embedded System with Intel® Pentium® M Processor and Dual PCI Support

New

Front view

Rear view

Features

RoHS

- Fanless Design with full feature I/O
- Supports socket type Intel® Celeron® M/Pentium® M processor
- Supports dual 32bit/33MHz PCI slot
- High performance DDR2 DIMM max. up to 2GB
- One 2.5" SATA/IDE HDD drive bay
- Watchdog Timer
- ATX 107W 15V~28V DC-in power supply, optional with AC-to-DC Adapter
- Wall mount

Specifications

Standard Color	Silver
Construction	Aluminum die-casting and heavy-duty steel
CPU	Intel® Pentium® M/Celeron® M processor
System Board	SBC86822
System Memory	2 x 240-pin DDR2 DIMM max. up to 2GB
System I/O Outlet	3 x 9-pin D-Sub male connector, COM1~3 1 x 26-pin high-density D-Sub male connector for COM 4~6 1 x 15-pin D-Sub female connector for VGA 1 x PS/2 connector for Keyboard 1 x PS/2 connector for Mouse 1 x AC'97 Audio for Line-in/Line-out 2 x RJ45 connector for 10/100/1000Base-T Ethernet 6 x USB 2.0 connector 1 x 25-pin D-sub (male) for Print Port 1 x V_{DC} power input connector
Watchdog Timer	255 levels as SMI and Reset from 0~255 seconds
Expansion	1 x 2.5" SATA(default)/IDE HDD drive bay 2 x 32bit/33MHz PCI slot (max. length 200mm)
System Indicator	1 x green LED for system Power-on 1 x orange LED for HDD active
Switch	1 x ATX power switch
Power Supply	Input rating: Vdc15-28V (-10~70 degreeC) Output rating: 107W Output voltage: +5Vdc@9A, +12Vdc@3A,+3.3Vdc@6A, +5Vsb@1A, -10V@0.1A
Operating temperature	-10˚C to 50˚C (w/ BGA CPU, W.T. HDD, DC P/S) -10˚C to 40˚C (w/ PGA CPU, W.T. HDD, DC P/S)
Storage temperature	-20˚C to 80˚C
Humidity	10-90% RH (no condensation)
Vibration endurance	1Grms (5-500Hz, X, Y, Z directions) operation w/ HDD
Weight	3.67kg (w/o HDD)
Certification	CE compliant
Dimension	182mm (7.17") (W) x 230mm (9.06") (D) x 130.8mm (5.15") (H)
Embedded OS	XPE, WinCE, Linux

*W.T.: Wide Temperature. All W.T. supported products have to be sorted by AXIOMTEK.
**XPE: Windows® XP Embedded

Ordering Information

Standard	
eBOX639-822 -1GE-FL DC	Fanless embedded system with Intel® Celeron® M 1GHz/0KB processor, DC-in ATX 107W
eBOX639-822 -FL DC	Fanless embedded system with Intel® socket type processor, DC-in ATX 107W
Optional	
2.5" HDD	20GB, 40GB, 80GB
DDR2 DIMM	512MB, 1GB, 2GB
AC- DC Power Adapter	

*Specifications and certifications are limited to optional.
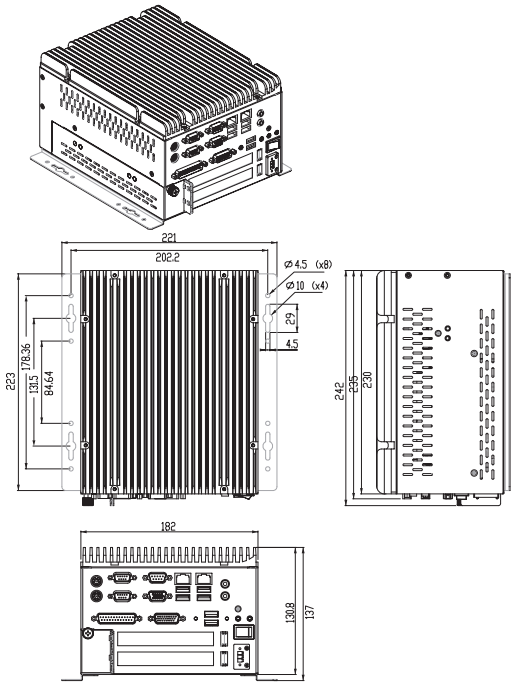
Dimensions